TWISTLOCKS – CHASSIS TYPE
NON-RETRACTABLE w/ LIGHT HOLES
CHASSIS

MODEL 1101-1131-L
MODEL 1101-1131-R

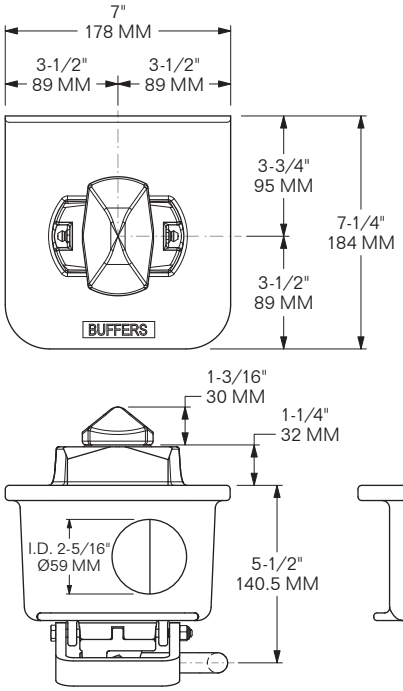

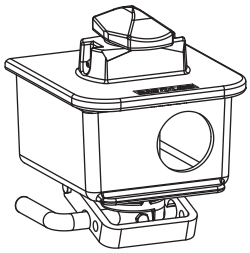

MODEL 1101-1131-L
for Rear Roadside
(& Front Curbside if 20')
1 Light Hole

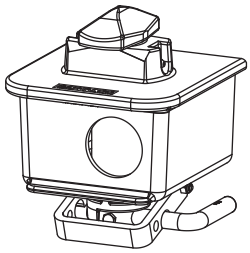

MODEL 1101-1131-R
for Rear Curbside
(& Front Roadside if 20')
1 Light Hole

FINISH: WELDABLE PRIMER
WEIGHT: 22.9 LBS / 10.4 Kg

MODEL 1101-1131-L is shown dimensioned.
MODEL 1101-1131-R is the mirror opposite.

- Cast steel Housing & forged steel Pin
- Meets AAR specifications for Rail use
- Dual Grease Fittings
- Ledge extended to protect Light

EXPLODED VIEW

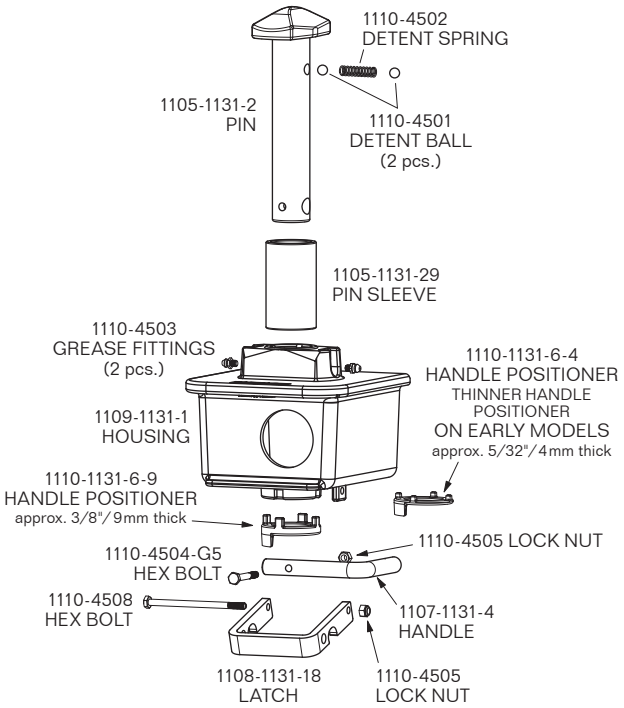

MODEL 1110-8400

LIGHT HOLE PLUG
Weld-on

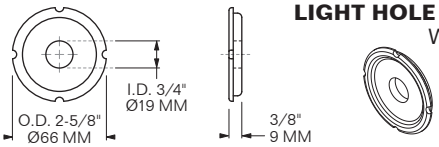

CONVERTS Ø2-5/16" LIGHT HOLE TO Ø3/4"
MATERIAL: CAST STEEL **FINISH:** WELDABLE PRIMER
WEIGHT: 0.3 LBS / 0.136 Kg

MODEL 1110-8674

LIGHT HOLE PLUG
Bolt-on

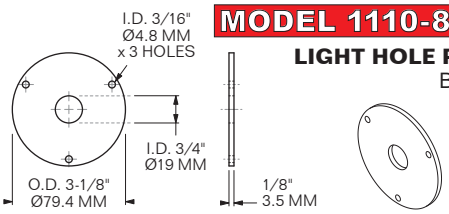

CONVERTS Ø2-5/16" LIGHT HOLE TO Ø3/4"
MATERIAL: STEEL **FINISH:** WELDABLE PRIMER
WEIGHT: 0.28 LBS / 0.127 Kg

BUFFERS USA INC ®
"The Intermodal Hardware Specialists"

904-696-0010
E-mail: sales@buffersusa.com

TWISTLOCKS – CHASSIS TYPE
NON-RETRACTABLE w/ LIGHT HOLES
CHASSIS

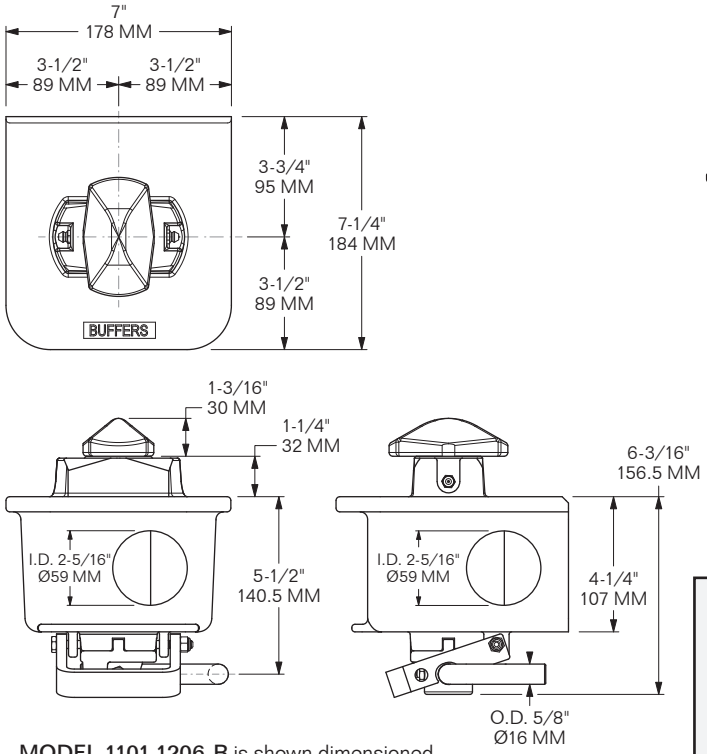

MODEL 1101-1206-R is shown dimensioned.
MODEL 1101-1206-L is the mirror opposite (except for housing).

MODEL 1101-1206-L
MODEL 1101-1206-R

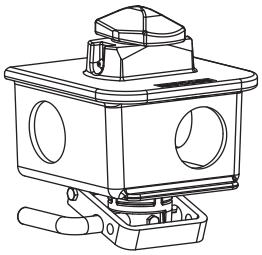

MODEL 1101-1206-L
for Rear Roadside
(& Front Curbside if 20')
3 Light Holes

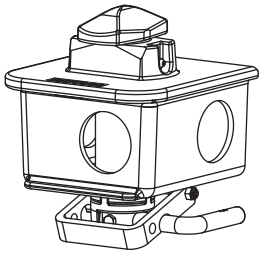

MODEL 1101-1206-R
for Rear Curbside
(& Front Roadside if 20')
3 Light Holes

FINISH: WELDABLE PRIMER
WEIGHT: 21.6 LBS / 10.2 Kg

- Cast steel Housing & forged steel Pin
- Meets AAR specifications for Rail use
- Easily changed from left-hand to right-hand with no extra parts
- 3 Light Holes in Housings for added flexibility
- Unused Light Holes can be blanked off with Plugs shown below, or others shown on pg. **1110-5**
- Dual Grease Fittings
- Ledges extended to protect Lights

EXPLODED VIEW

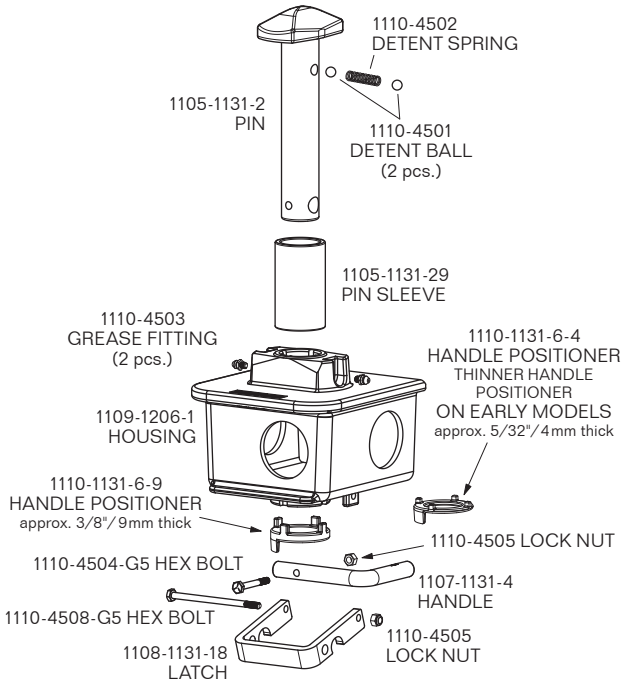

MODEL 1110-8400
MODEL 1110-8400-MOD

LIGHT HOLE PLUG, Weld-on

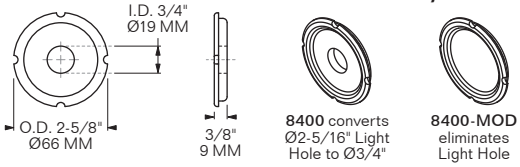

MATERIAL: CAST STEEL **FINISH:** WELDABLE PRIMER
8400 WEIGHT: 0.3 LBS / 0.136 Kg
8400-MOD WEIGHT: 0.33 LBS / 0.15 Kg

MODEL 1110-8674

LIGHT HOLE PLUG
Bolt-on

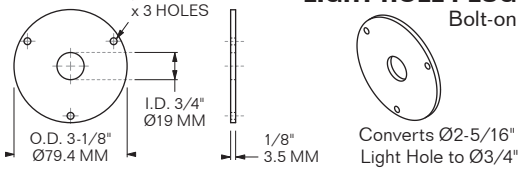

MATERIAL: STEEL **FINISH:** WELDABLE PRIMER
WEIGHT: 0.28 LBS / 0.127 Kg

BUFFERS USA INC ®
"The Intermodal Hardware Specialists"
904-696-0010
E-mail: sales@buffersusa.com

TWISTLOCKS – CHASSIS TYPE
NON-RETRACTABLE w/ LIGHT HOLES
CHASSIS

MODEL 1101-1207-L
MODEL 1101-1207-R

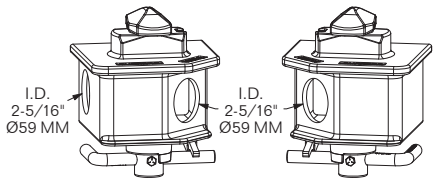

1101-1207-L
for Rear Roadside
(& Front Curbside if 20')
2 Light Holes

1101-1207-R
for Rear Curbside
(& Front Roadside if 20')
1 Light Hole

FINISH: WELDABLE PRIMER
WEIGHT: 22.3 LBS / 10.1 Kg

MODEL 1101-1207-75-L
MODEL 1101-1207-75-R

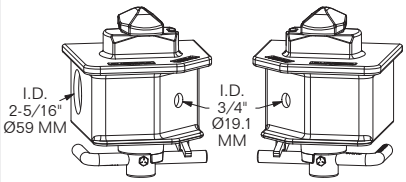

1101-1207-75-L
for Rear Roadside
(& Front Curbside if 20')
2 Light Holes

1101-1207-75-R
for Rear Curbside
(& Front Roadside if 20')
1 Light Hole

FINISH: WELDABLE PRIMER
WEIGHT: 22.5 LBS / 10.2 Kg

MODEL 1101-1207-275-L
MODEL 1101-1207-275-R

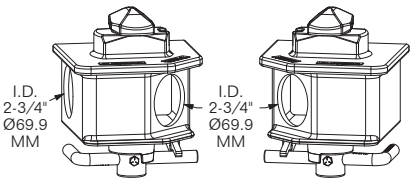

1101-1207-275-L
for Rear Roadside
(& Front Curbside if 20')
2 Light Holes

1101-1207-275-R
for Rear Curbside
(& Front Roadside if 20')
1 Light Hole

FINISH: WELDABLE PRIMER
WEIGHT: 22 LBS / 10 Kg

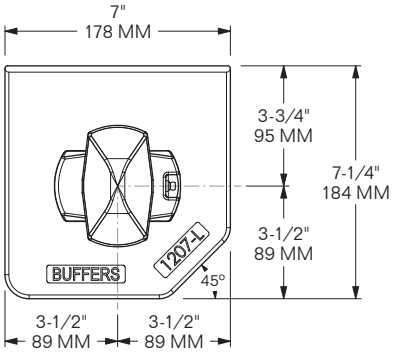

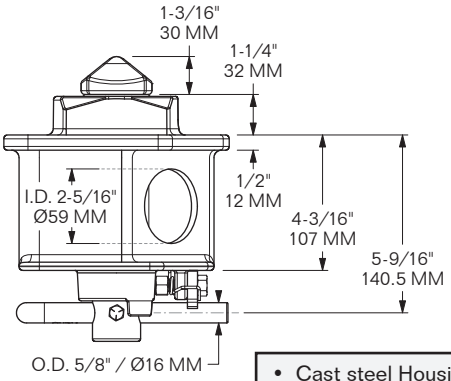

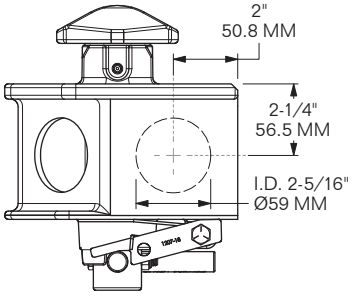

MODEL 1101-1207-L is shown dimensioned.
MODEL 1101-1207-R is the mirror opposite (w/ only one light hole).

- Cast steel Housing & forged steel Pin
- Meets AAR specifications for Rail use
- Easy-to-operate Gravity Latch
- Angled corner for Side & Rear Light visibility
- Unused Light Holes can be blanked off with Plugs shown below, or others shown on pg. **1110-5**

EXPLODED VIEW

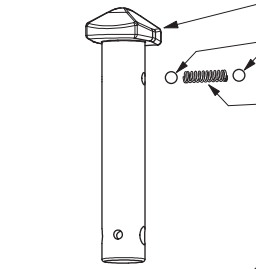

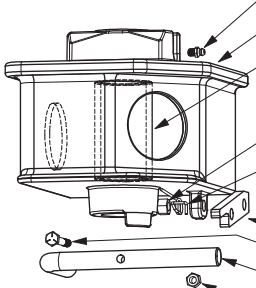

1105-1131-2
PIN

1110-4501
DETENT BALL
(2 pcs.)

1110-4502
DETENT SPRING

1110-4503
GREASE FITTING

1109-1207-1-L
HOUSING*

*1105-1131-29
PIN SLEEVE
is welded to Housing

1110-4632
HEX NUT w/ Nylon Insert

1110-3706-19L
LATCH SPRING
for **1101-1207-R** Twistlock

1110-3706-19R
LATCH SPRING
for **1101-1207-L** Twistlock

1110-4631-G5 HEX BOLT

1108-1207-18 LATCH

1110-4504-G5 HEX BOLT

1107-1207-4 HANDLE

1110-4505
HEX NUT w/ Nylon Insert

MODEL 1110-8400
MODEL 1110-8400-MOD

LIGHT HOLE PLUG, Weld-on

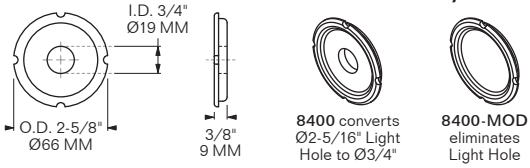

MATERIAL: CAST STEEL **FINISH:** WELDABLE PRIMER
8400 WEIGHT: 0.3 LBS / 0.136 Kg
8400-MOD WEIGHT: 0.33 LBS / 0.15 Kg

MODEL 1110-8674

LIGHT HOLE PLUG
Bolt-on

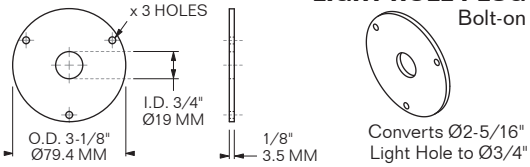

MATERIAL: STEEL **FINISH:** WELDABLE PRIMER
WEIGHT: 0.28 LBS / 0.127 Kg

BUFFERS USA INC ®
"The Intermodal Hardware Specialists"

904-696-0010
E-mail: sales@buffersusa.com

TWISTLOCKS – CHASSIS TYPE
NON-RETRACTABLE w/ LIGHT HOLES
CHASSIS

MODEL 1101-3817-L
MODEL 1101-3817-R

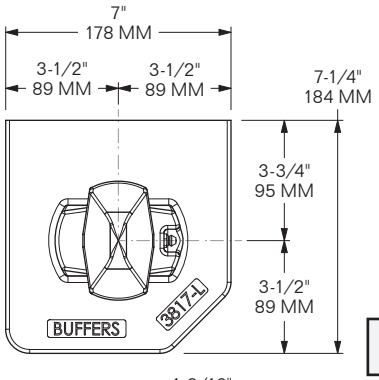

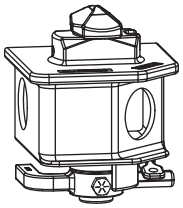

MODEL 1101-3817-L
for Rear Roadside
(& Front Curbside if 20')
2 Light Holes

FINISH: PRIMER
WEIGHT: 24.7 LBS / 11.2 Kg

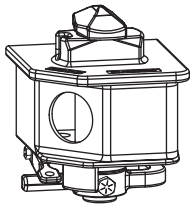

MODEL 1101-3817-R
for Rear Curbside
(& Front Roadside if 20')
1 Light Hole

FINISH: PRIMER
WEIGHT: 25.1 LBS / 11.4 Kg

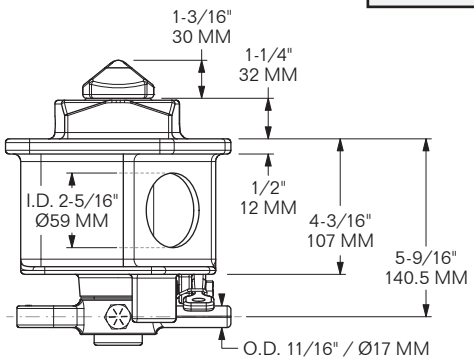

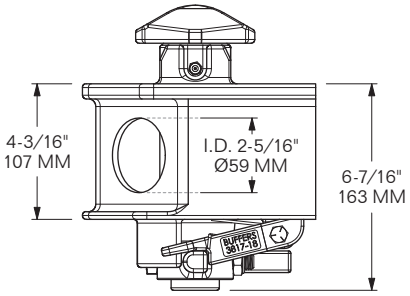

MODEL 1101-3817-L is shown dimensioned.
MODEL 1101-3817-R is the mirror opposite (w/ only one light hole).

- Cast steel Housing & forged steel Pin
- Meets AAR specifications for Rail use
- Easy-to-operate Gravity Latch
- Angled corner for Side & Rear Light visibility

EXPLODED VIEW

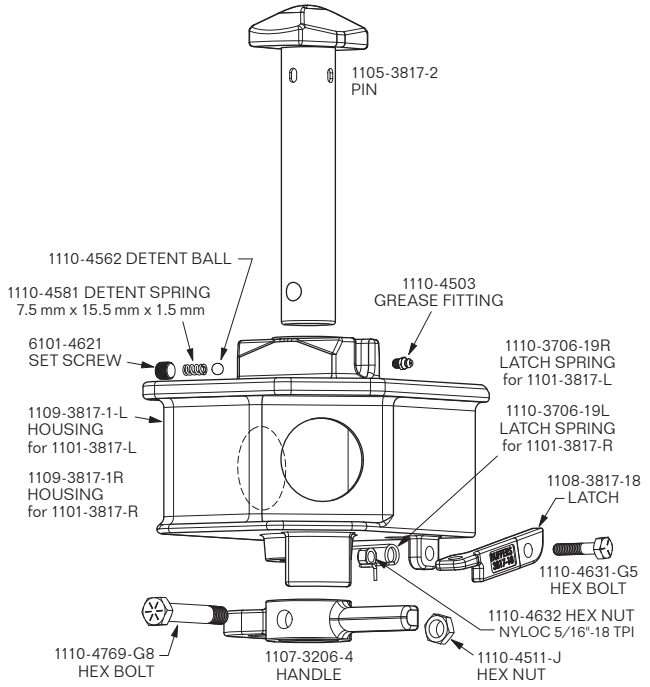

MODEL 1110-8400

LIGHT HOLE PLUG
Weld-on

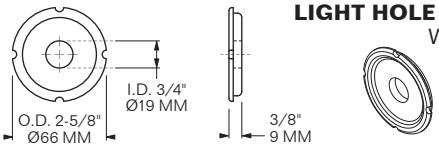

CONVERTS Ø2-5/16" LIGHT HOLE TO Ø3/4"
MATERIAL: CAST STEEL **FINISH:** WELDABLE PRIMER
WEIGHT: 0.3 LBS / 0.136 Kg

MODEL 1110-8674

LIGHT HOLE PLUG
Bolt-on

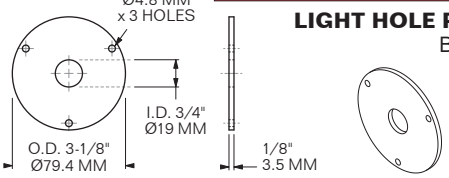

CONVERTS Ø2-5/16" LIGHT HOLE TO Ø3/4"
MATERIAL: STEEL **FINISH:** WELDABLE PRIMER
WEIGHT: 0.28 LBS / 0.127 Kg

BUFFERS USA INC ®
"The Intermodal Hardware Specialists"

904-696-0010
E-mail: sales@buffersusa.com

TWISTLOCKS – CHASSIS TYPE
NON-RETRACTABLE w/ LIGHT HOLES
CHASSIS

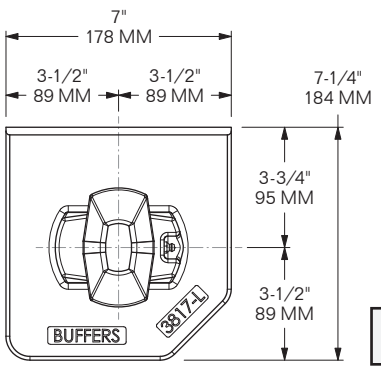

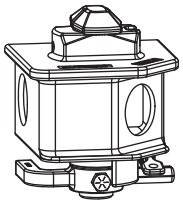

MODEL 1101-3817-LP-L
for Rear Roadside
(& Front Curbside if 20')
2 Light Holes

FINISH: PRIMER
WEIGHT: 24.3 LBS / 11 Kg

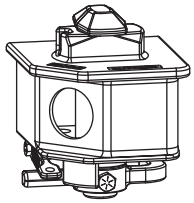

MODEL 1101-3817-LP-R
for Rear Curbside
(& Front Roadside if 20')
1 Light Hole

FINISH: PRIMER
WEIGHT: 24.7 LBS / 11.2 Kg

MODEL 1101-3817-LP-L
MODEL 1101-3817-LP-R
w/ Low-profile Head

1101-3817-LP-L/R Twistlocks are the same as **1101-3817-L/R** Twistlocks except Pin Design.

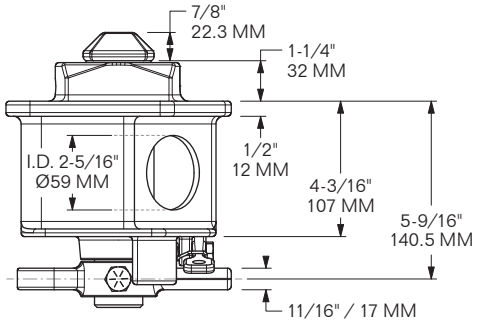

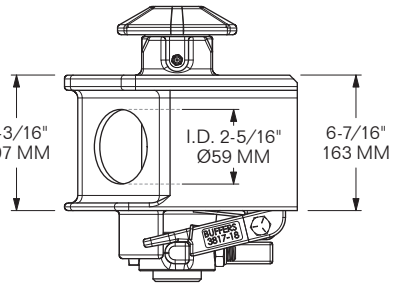

MODEL 1101-3817-LP-L is shown dimensioned.
MODEL 1101-3817-LP-R is the mirror opposite (w/ only one light hole).

- Low-profile Pin Head works w/ low-clearance corner fittings on ALL 53' containers in U.S. & Canadian markets
- Cast steel Housing & forged steel Pin
- Meets AAR specifications for Rail use
- Easy-to-operate Gravity Latch
- Angled corner for Side & Rear Light visibility

EXPLODED VIEW

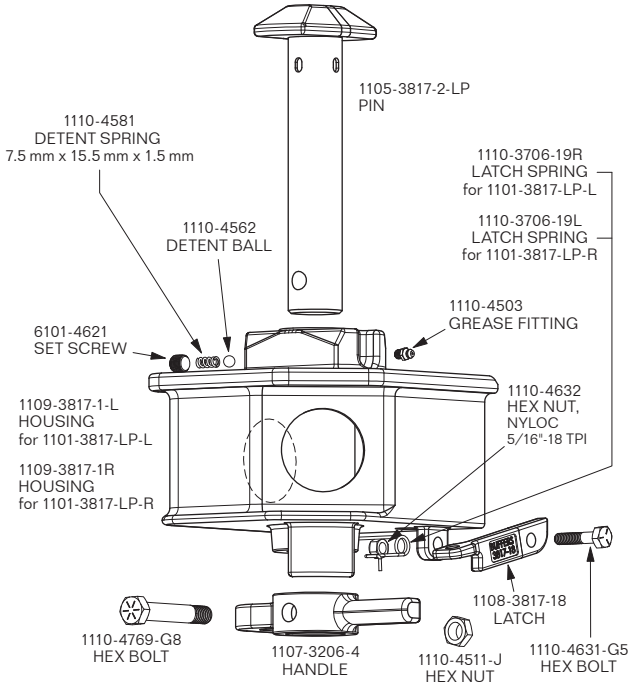

MODEL 1110-8400

LIGHT HOLE PLUG
Weld-on

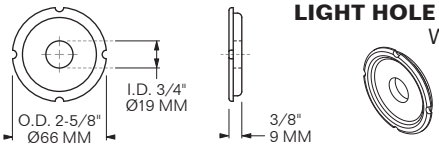

CONVERTS Ø2-5/16" LIGHT HOLE TO Ø3/4"
MATERIAL: CAST STEEL **FINISH:** WELDABLE PRIMER
WEIGHT: 0.3 LBS / 0.136 Kg

MODEL 1110-8674

LIGHT HOLE PLUG
Bolt-on

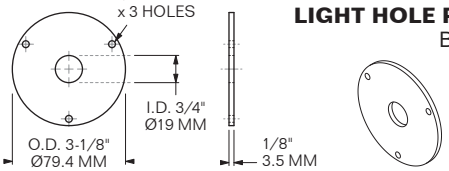

CONVERTS Ø2-5/16" LIGHT HOLE TO Ø3/4"
MATERIAL: STEEL **FINISH:** WELDABLE PRIMER
WEIGHT: 0.28 LBS / 0.127 Kg

BUFFERS USA INC ®
"The Intermodal Hardware Specialists"

904-696-0010
E-mail: sales@buffersusa.com

TWISTLOCKS – CHASSIS TYPE

NON-RETRACTABLE w/ LIGHT HOLES, HEAVY DUTY

CHASSIS

MODEL 1101-3206-ABS-L
MODEL 1101-3206-L
MODEL 1101-3206-R

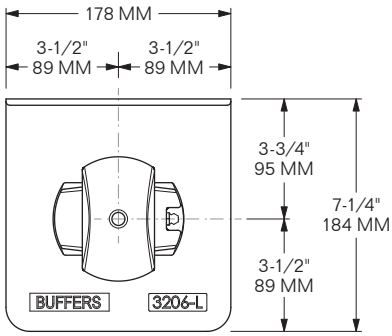

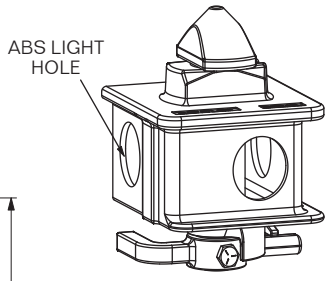

MODEL 1101-3206-ABS-L
for Rear Roadside
(& Front Curbside if 20')
3 Light Holes

FINISH: WELDABLE PRIMER
WEIGHT: 26.2 LBS / 11.88 Kg

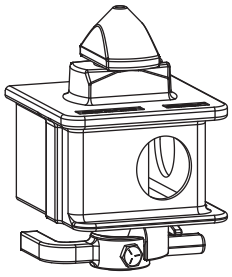

MODEL 1101-3206-L
for Rear Roadside
(& Front Curbside if 20')
2 Light Holes

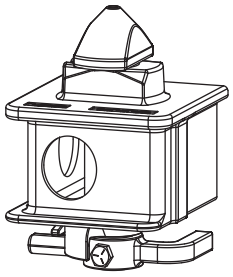

MODEL 1101-3206-R
for Rear Curbside
(& Front Roadside if 20')
2 Light Holes

FINISH: WELDABLE PRIMER
WEIGHT: 26.6 LBS / 12.07 Kg

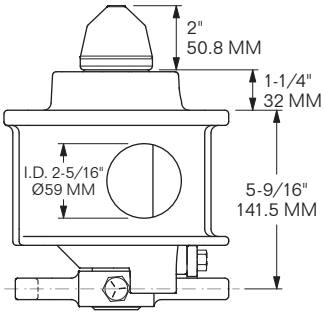

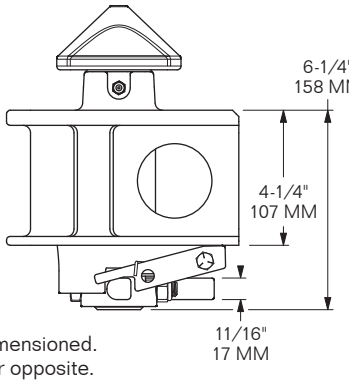

MODEL 1101-3206-L is shown dimensioned.
MODEL 1101-3206-R is the mirror opposite.

- Heavy-duty cast steel Housing & forged steel Pin
- Meets AAR specifications for Rail use
- Easy-to-operate Gravity Latch
- Unused Light Holes can be blanked off with **1110-1209** Rubber Hole Plug
- Ledges extended to protect Lights

EXPLODED VIEW

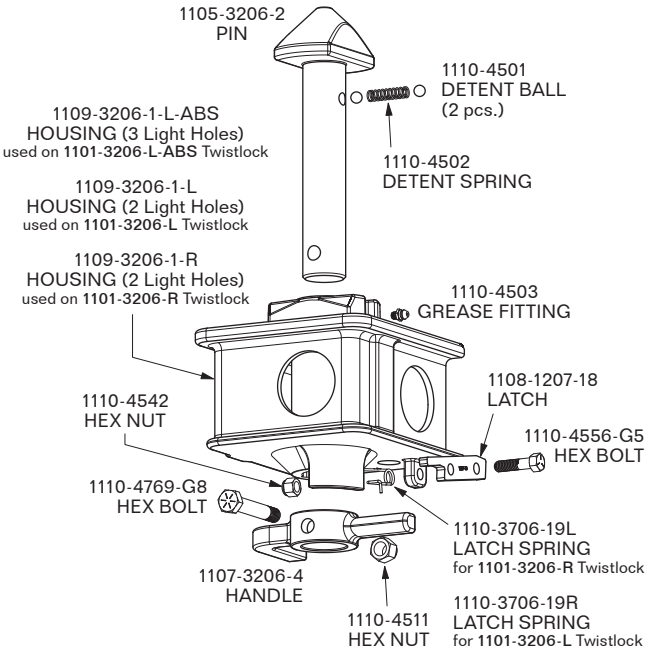

MODEL 1110-8400

LIGHT HOLE PLUG
Weld-on

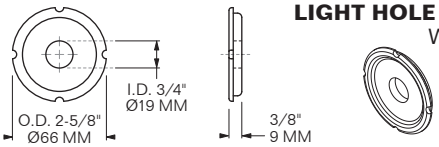

CONVERTS Ø2-5/16" LIGHT HOLE TO Ø3/4"
MATERIAL: CAST STEEL **FINISH:** WELDABLE PRIMER
WEIGHT: 0.3 LBS / 0.136 Kg

MODEL 1110-8674

LIGHT HOLE PLUG
Bolt-on

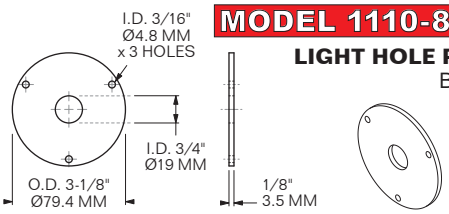

CONVERTS Ø2-5/16" LIGHT HOLE TO Ø3/4"
MATERIAL: STEEL **FINISH:** WELDABLE PRIMER
WEIGHT: 0.28 LBS / 0.127 Kg

BUFFERS USA INC ®
"The Intermodal Hardware Specialists"

904-696-0010
E-mail: sales@buffersusa.com

TWISTLOCKS – CHASSIS TYPE
NON-RETRACTABLE w/ LIGHT HOLES
CHASSIS

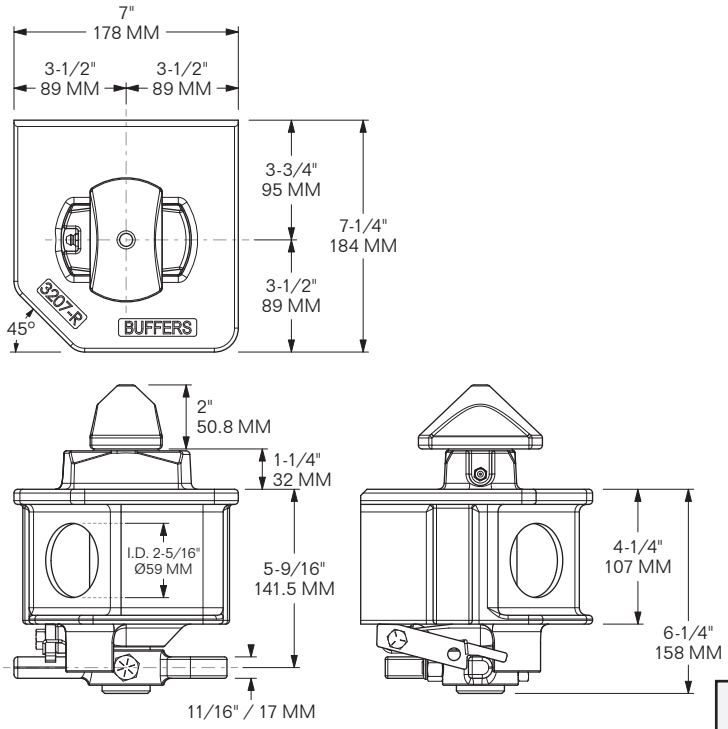

MODEL 1101-3207-R is shown dimensioned.
MODEL 1101-3207-L is the mirror opposite (w/ two light holes).

MODEL 1101-3207-L
MODEL 1101-3207-R
w/ High-profile Pin

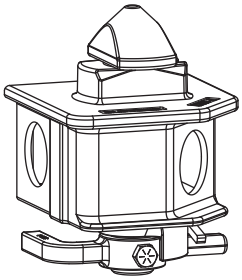

MODEL 1101-3207-L
for Rear Roadside
(& Front Curbside if 20')
2 Light Holes

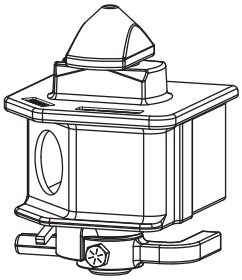

MODEL 1101-3207-R
for Rear Curbside
(& Front Roadside if 20')
1 Light Hole

FINISH: WELDABLE PRIMER
WEIGHT: 27.8 LBS / 12.6 Kg

- Heavy-duty cast steel Housing & forged steel Pin
- Meets AAR specifications for Rail use
- Easy-to-operate Gravity Latch
- Unused Light Holes can be blanked off with **1110-1209** Rubber Hole Plug
- Angled corner for Side & Rear Light visibility

EXPLODED VIEW

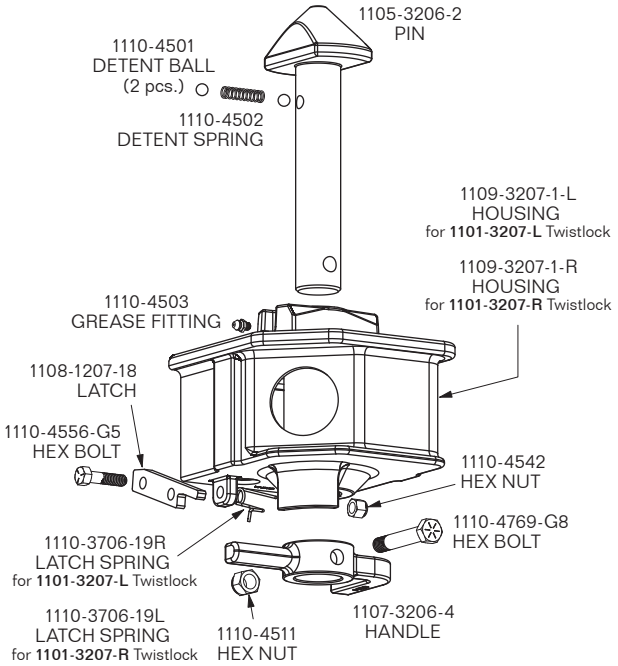

MODEL 1110-8400
LIGHT HOLE PLUG
Weld-on

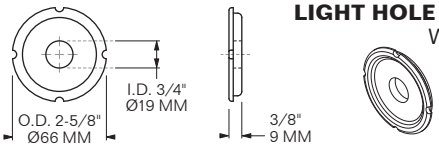

CONVERTS Ø2-5/16" LIGHT HOLE TO Ø3/4"
MATERIAL: CAST STEEL **FINISH:** WELDABLE PRIMER
WEIGHT: 0.3 LBS / 0.136 Kg

MODEL 1110-8674
LIGHT HOLE PLUG
Bolt-on

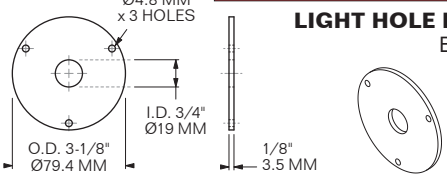

CONVERTS Ø2-5/16" LIGHT HOLE TO Ø3/4"
MATERIAL: STEEL **FINISH:** WELDABLE PRIMER
WEIGHT: 0.28 LBS / 0.127 Kg

BUFFERS USA INC ®
"The Intermodal Hardware Specialists"

904-696-0010
E-mail: sales@buffersusa.com

TWISTLOCKS – CHASSIS TYPE

NON-RETRACTABLE w/ LIGHT HOLES

HEAVY DUTY for SHALLOW CORNER CASTINGS

CHASSIS

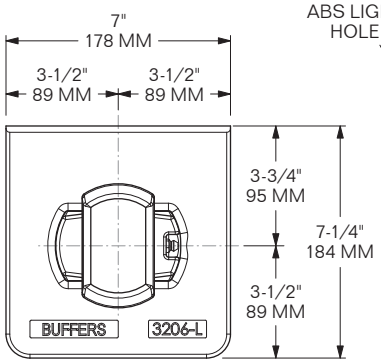

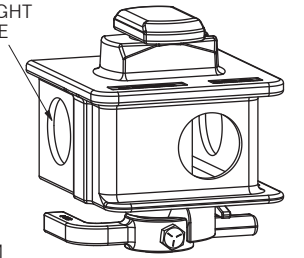

MODEL 1101-3406-ABS-L
for Rear Roadside
(& Front Curbside if 20')
3 Light Holes

FINISH: WELDABLE PRIMER
WEIGHT: 26.4 LBS / 11.98 Kg

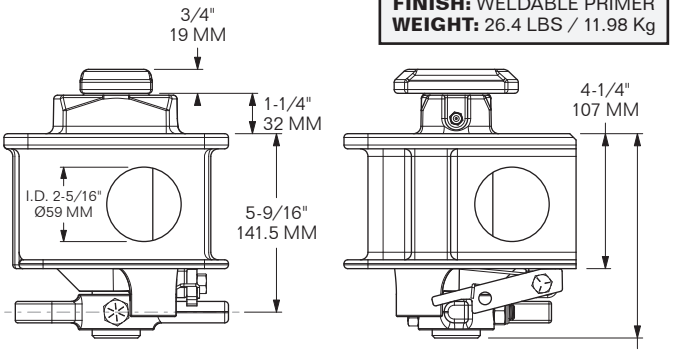

MODEL 1101-3406-L is shown dimensioned.
MODEL 1101-3406-R is the mirror opposite.

MODEL 1101-3406-ABS-L
MODEL 1101-3406-L
MODEL 1101-3406-R

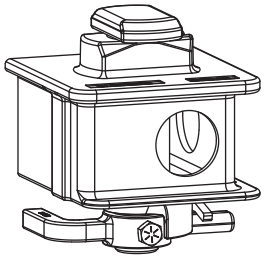

MODEL 1101-3406-L
for Rear Roadside
(& Front Curbside if 20')
2 Light Holes

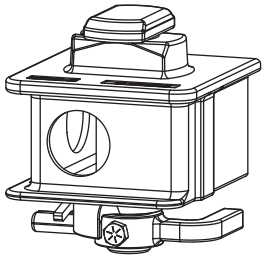

MODEL 1101-3406-R
for Rear Curbside
(& Front Roadside if 20')
2 Light Holes

FINISH: WELDABLE PRIMER
WEIGHT: 26.8 LBS / 12.11 Kg

- Heavy-duty cast steel Housing & forged steel Pin
- Meets AAR specifications for Rail use
- Easy-to-operate Gravity Latch
- Unused Light Holes can be blanked off with Plugs shown below, or others shown on pg. **1110-5**
- Ledges extended to protect Lights
- Fits most shallow Corner Castings

EXPLODED VIEW

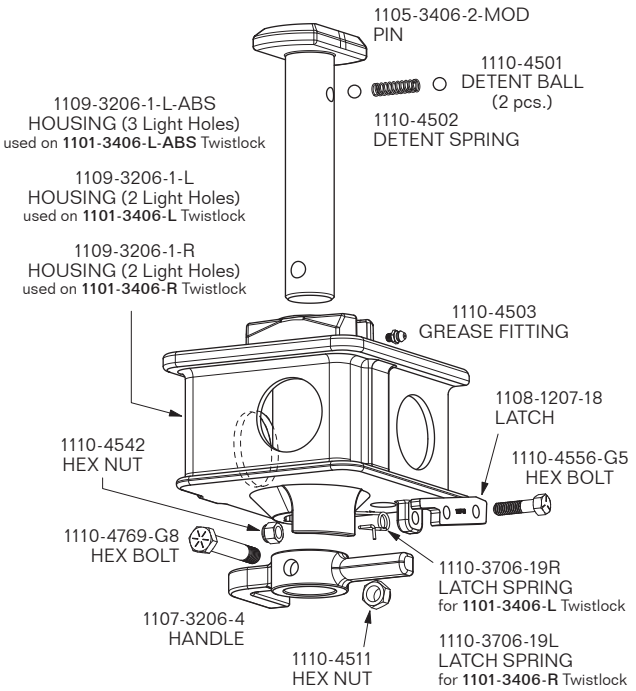

MODEL 1110-8400
MODEL 1110-8400-MOD

LIGHT HOLE PLUG, Weld-on

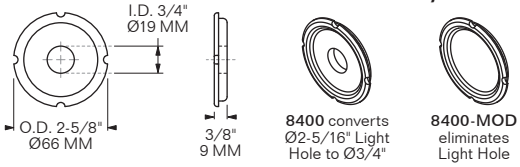

MATERIAL: CAST STEEL **FINISH:** WELDABLE PRIMER
8400 WEIGHT: 0.3 LBS / 0.136 Kg
8400-MOD WEIGHT: 0.33 LBS / 0.15 Kg

MODEL 1110-8674

LIGHT HOLE PLUG
Bolt-on

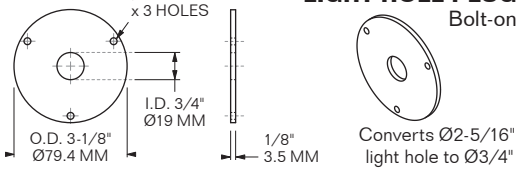

MATERIAL: STEEL **FINISH:** WELDABLE PRIMER
WEIGHT: 0.28 LBS / 0.127 Kg

BUFFERS USA INC ®
"The Intermodal Hardware Specialists"

904-696-0010
E-mail: sales@buffersusa.com

TWISTLOCKS – CHASSIS TYPE

NON-RETRACTABLE w/ LIGHT HOLES

HEAVY DUTY for SHALLOW CORNER CASTINGS

CHASSIS

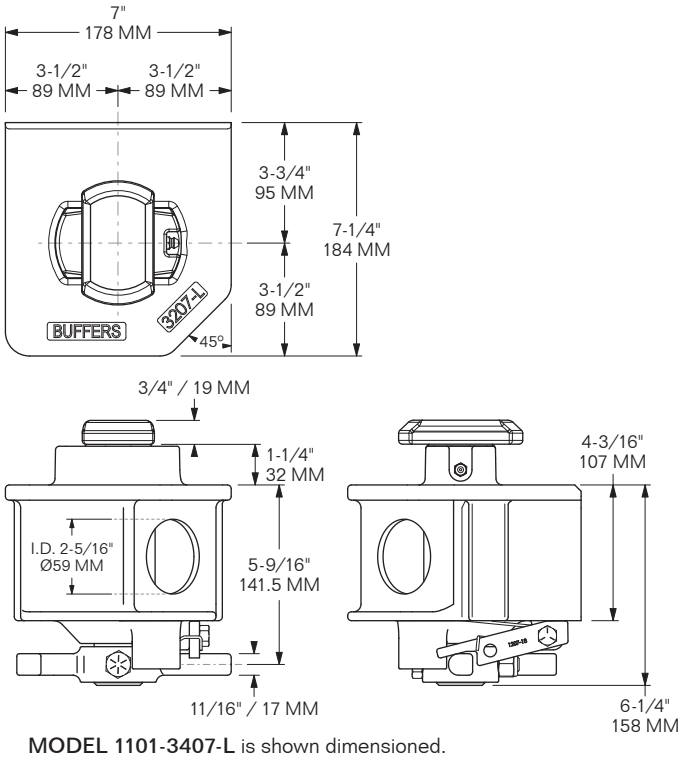

MODEL 1101-3407-L is shown dimensioned.
MODEL 1101-3407-R is the mirror opposite (w/ only one light hole).

MODEL 1101-3407-L
MODEL 1101-3407-R

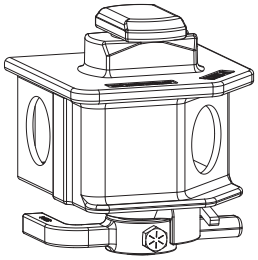

MODEL 1101-3407-L
for Rear Roadside
(& Front Curbside if 20')
2 Light Holes

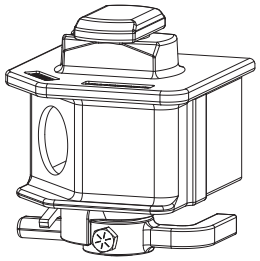

MODEL 1101-3407-R
for Rear Curbside
(& Front Roadside if 20')
1 Light Hole

FINISH: WELDABLE PRIMER
WEIGHT: 26.8 LBS / 12.2 Kg

- Heavy-duty cast steel Housing & forged steel Pin
- Meets AAR specifications for Rail use
- Easy-to-operate Gravity Latch
- Unused Light Holes can be blanked off with **1110-1209** Rubber Hole Plug
- Ledges extended to protect Lights
- Fits most shallow Corner Castings
- Angled corner for Side & Rear Light visibility

EXPLODED VIEW

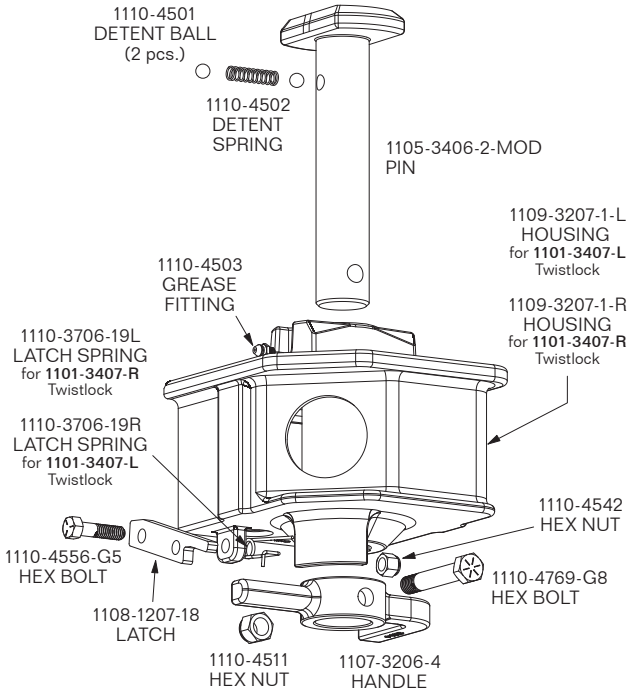

MODEL 1110-8400

LIGHT HOLE PLUG
Weld-on

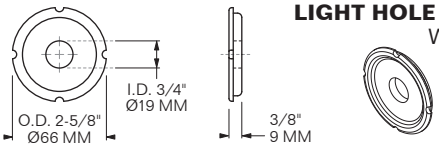

CONVERTS Ø2-5/16" LIGHT HOLE TO Ø3/4"
MATERIAL: CAST STEEL **FINISH:** WELDABLE PRIMER
WEIGHT: 0.3 LBS / 0.136 Kg

MODEL 1110-8674

LIGHT HOLE PLUG
Bolt-on

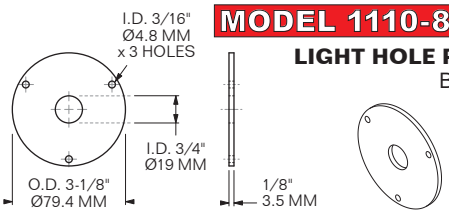

CONVERTS Ø2-5/16" LIGHT HOLE TO Ø3/4"
MATERIAL: STEEL **FINISH:** WELDABLE PRIMER
WEIGHT: 0.28 LBS / 0.127 Kg

BUFFERS USA INC ®
"The Intermodal Hardware Specialists"

904-696-0010
E-mail: sales@buffersusa.com

TWISTLOCKS – CHASSIS TYPE

NON-RETRACTABLE w/ LIGHT HOLES

CHASSIS

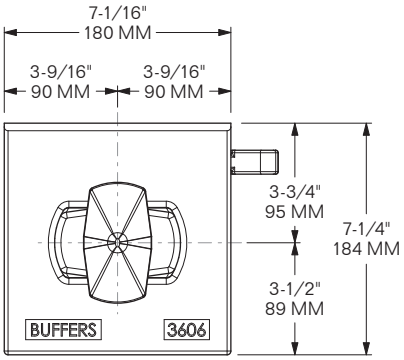

1101-3606 is the same as **1101-3606-LP** except Pin Design.

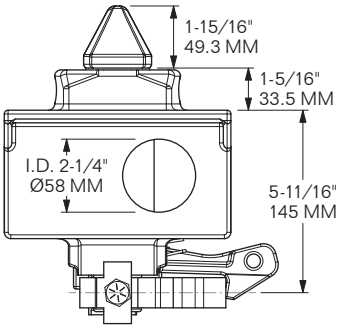

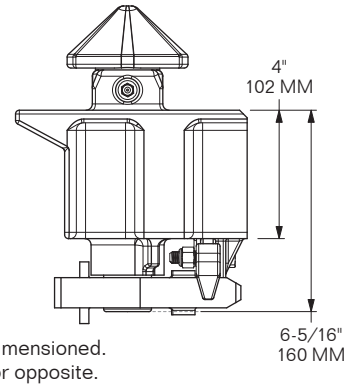

MODEL 1101-3606-R is shown dimensioned.
MODEL 1101-3606-L is the mirror opposite.

SPECIAL ORDER ONLY **MODEL 1101-3606-L**

SPECIAL ORDER ONLY **MODEL 1101-3606-R**

w/ High-profile Head

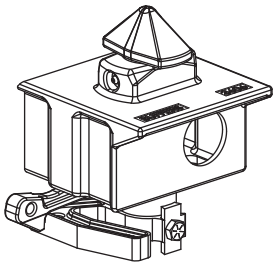

MODEL 1101-3606-L
for Rear Roadside
(& Front Curbside if 20')
1 Light Hole

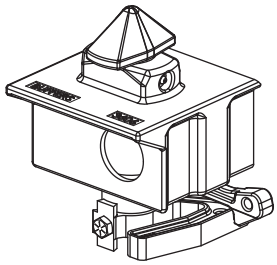

MODEL 1101-3606-R
for Rear Curbside
(& Front Roadside if 20')
1 Light Hole

SUB FOR: SCHULZ F33NS-XX
FINISH: WELDABLE PRIMER
WEIGHT: 28.3 LBS / 12.8 Kg

- Heavy-duty cast steel Housing & forged steel Pin
- Meets AAR specifications for Rail use
- Easy-to-operate Gravity Latch
- Unused Light Holes can be blanked off with **1110-1209** Rubber Hole Plug
- Ledges extended to protect Light

EXPLODED VIEW

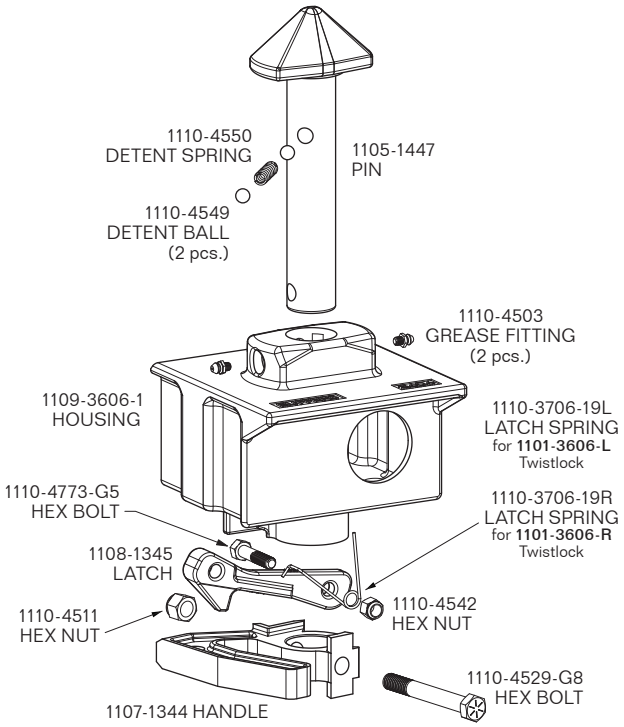

MODEL 1110-8400

LIGHT HOLE PLUG
Weld-on

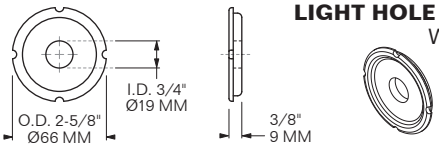

CONVERTS Ø2-5/16" LIGHT HOLE TO Ø3/4"
MATERIAL: CAST STEEL **FINISH:** WELDABLE PRIMER
WEIGHT: 0.3 LBS / 0.136 Kg

MODEL 1110-8674

LIGHT HOLE PLUG
Bolt-on

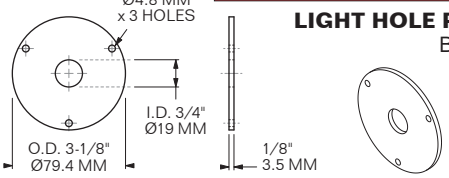

CONVERTS Ø2-5/16" LIGHT HOLE TO Ø3/4"
MATERIAL: STEEL **FINISH:** WELDABLE PRIMER
WEIGHT: 0.28 LBS / 0.127 Kg

BUFFERS USA INC ®
"The Intermodal Hardware Specialists"

904-696-0010
E-mail: sales@buffersusa.com

TWISTLOCKS – CHASSIS TYPE
NON-RETRACTABLE w/ LIGHT HOLES
CHASSIS

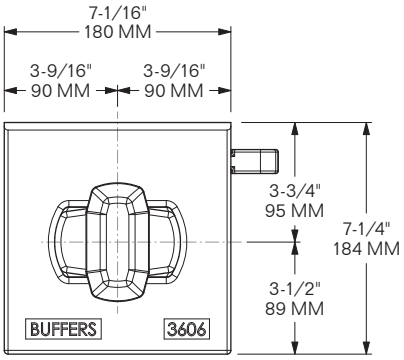

1101-3606-LP is the same as **1101-3606** except Pin Design.

MODEL 1101-3606-LP-L
MODEL 1101-3606-LP-R
w/ Low-profile Head

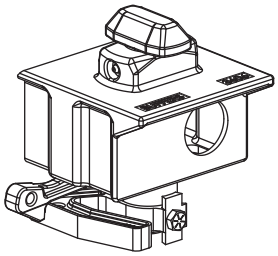

MODEL 1101-3606-LP-L
for Rear Roadside
(& Front Curbside if 20')
1 Light Hole

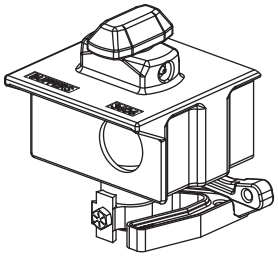

MODEL 1101-3606-LP-R
for Rear Curbside
(& Front Roadside if 20')
1 Light Hole

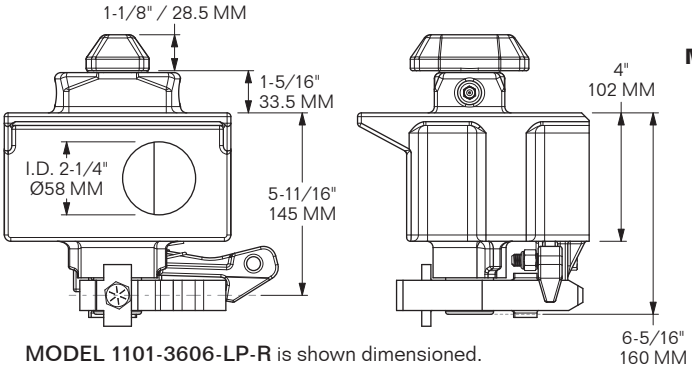

FINISH: WELDABLE PRIMER
WEIGHT: 28.3 LBS / 12.8 Kg

MODEL 1101-3606-LP-R is shown dimensioned.
MODEL 1101-3606-LP-L is the mirror opposite.

- Heavy-duty cast steel Housing & forged steel Pin
- Meets AAR specifications for Rail use
- Easy-to-operate Gravity Latch
- Unused Light Holes can be blanked off with **1110-1209** Rubber Hole Plug
- Ledges extended to protect Light

EXPLODED VIEW

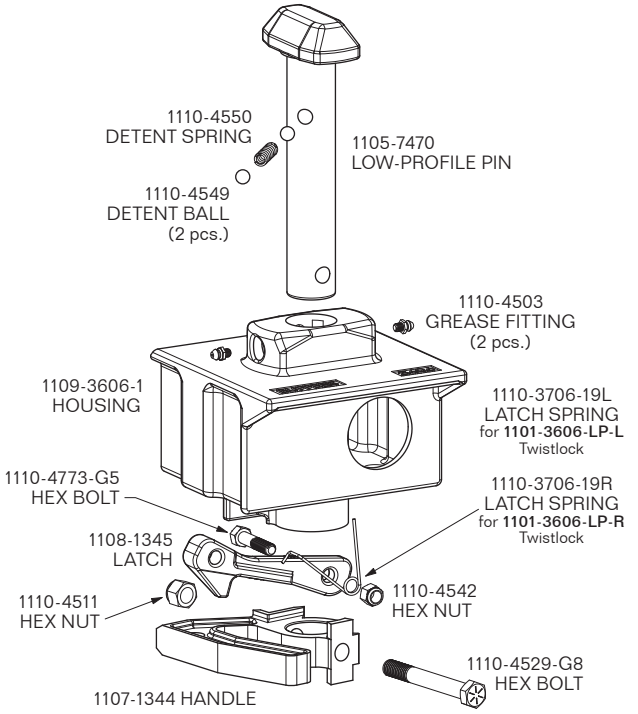

MODEL 1110-8400
LIGHT HOLE PLUG
Weld-on

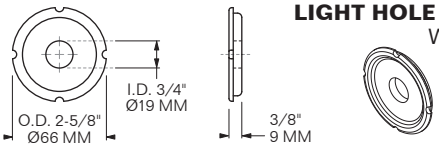

CONVERTS Ø2-5/16" LIGHT HOLE TO Ø3/4"
MATERIAL: CAST STEEL **FINISH:** WELDABLE PRIMER
WEIGHT: 0.3 LBS / 0.136 Kg

MODEL 1110-8674
LIGHT HOLE PLUG
Bolt-on

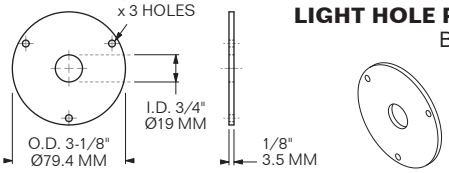

CONVERTS Ø2-5/16" LIGHT HOLE TO Ø3/4"
MATERIAL: STEEL **FINISH:** WELDABLE PRIMER
WEIGHT: 0.28 LBS / 0.127 Kg

BUFFERS USA INC ®
"The Intermodal Hardware Specialists"
904-696-0010
E-mail: sales@buffersusa.com

TWISTLOCKS – CHASSIS TYPE
w/ LIGHT HOLES
CHASSIS

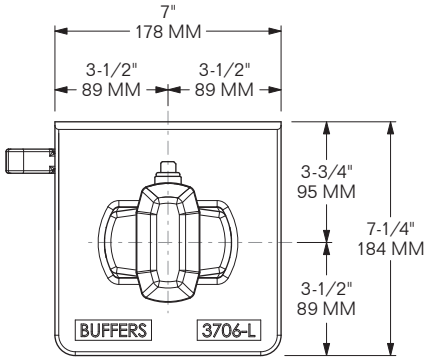

MODEL 1101-3706-L
MODEL 1101-3706-R

J.B. Hunt style w/ Low-profile Head

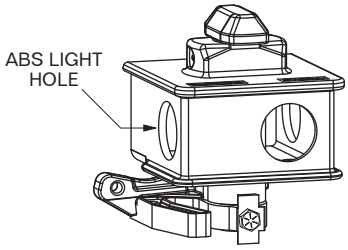

MODEL 1101-3706-L
for Rear Roadside
(& Front Curbside if 20')
3 Light Holes

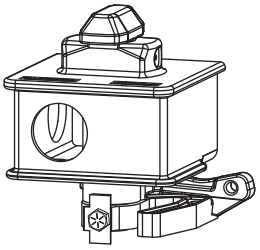

MODEL 1101-3706-R
for Rear Curbside
(& Front Roadside if 20')
2 Light Holes

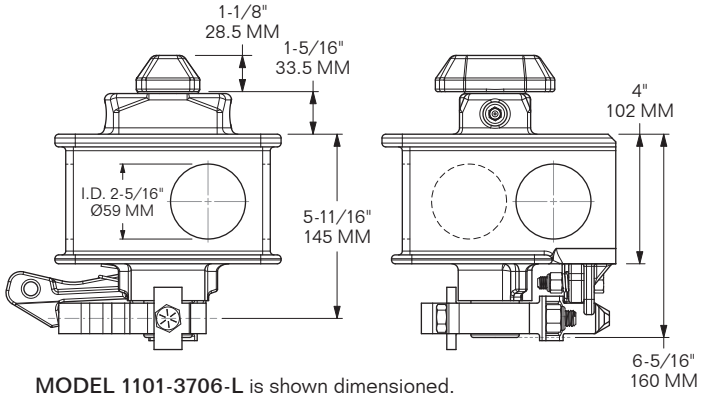

SUB FOR: SCHULZ F33NS-LP-JBH-XX-2
FINISH: WELDABLE PRIMER
WEIGHT: 28 LBS / 12.7 Kg

MODEL 1101-3706-L is shown dimensioned.
MODEL 1101-3706-R is the mirror opposite (w/ only two light holes).

- Heavy-duty cast steel Housing & forged steel Pin
- Meets AAR specifications for Rail use
- Easy-to-operate Gravity Latch
- Unused Light Holes can be blanked off with **1110-1209** Rubber Hole Plug
- Ledges extended to protect Lights

EXPLODED VIEW

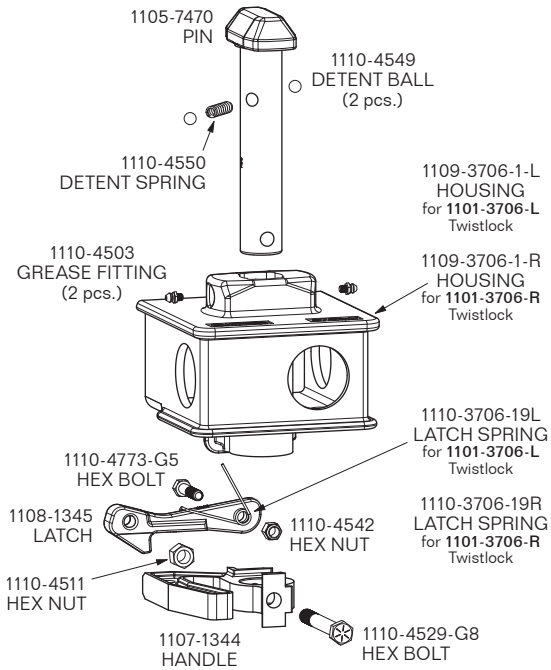

MODEL 1110-8400

LIGHT HOLE PLUG
Weld-on

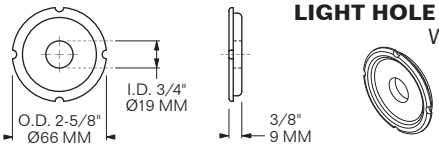

CONVERTS Ø2-5/16" LIGHT HOLE TO Ø3/4"
MATERIAL: CAST STEEL **FINISH:** WELDABLE PRIMER
WEIGHT: 0.3 LBS / 0.136 Kg

MODEL 1110-8674

LIGHT HOLE PLUG
Bolt-on

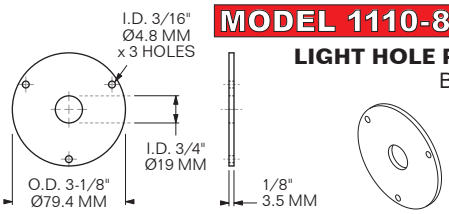

CONVERTS Ø2-5/16" LIGHT HOLE TO Ø3/4"
MATERIAL: STEEL **FINISH:** WELDABLE PRIMER
WEIGHT: 0.28 LBS / 0.127 Kg

BUFFERS USA INC ®
"The Intermodal Hardware Specialists"

904-696-0010
E-mail: sales@buffersusa.com

TWISTLOCKS – CHASSIS TYPE
w/ LIGHT HOLES
CHASSIS

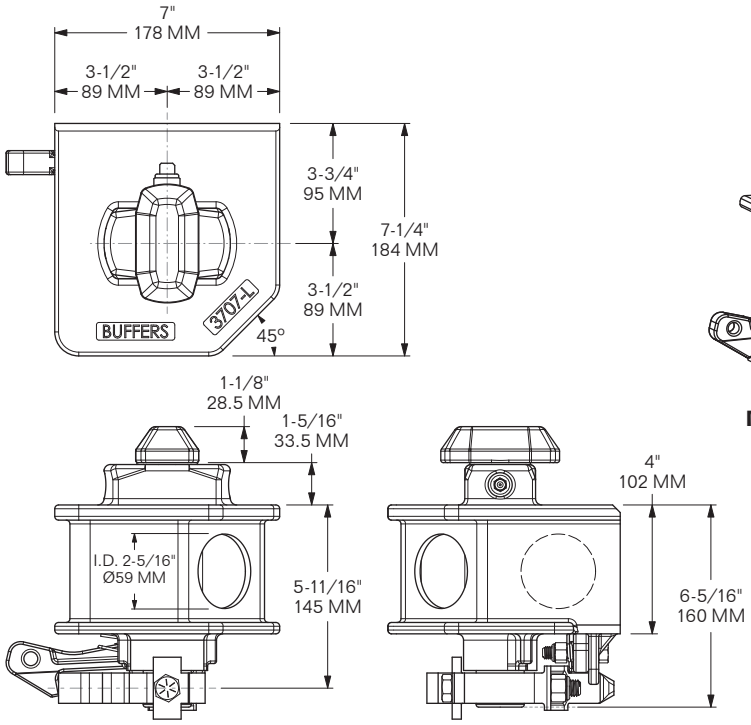

MODEL 1101-3707-L
MODEL 1101-3707-R

J.B. Hunt style w/ Low-profile Head

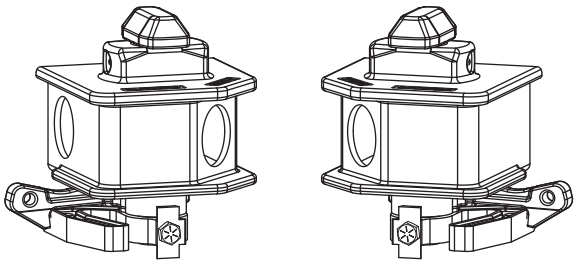

MODEL 1101-3707-L
ffor Rear Roadside
(& Front Curbside if 20')
2 Light Holes

MODEL 1101-3707-R
for Rear Curbside
(& Front Roadside if 20')
1 Light Hole

SUB FOR:
SCHULZ F33NS-45-LP-XX-JBH
FINISH: WELDABLE PRIMER
WEIGHT: 28 LBS / 12.7 Kg

MODEL 1101-3707-L is shown dimensioned.
MODEL 1101-3707-R is the mirror opposite (w/ only one light hole).

- Cast steel Housing & forged steel Pin
- Meets AAR specifications for Rail use
- Easy-to-operate Gravity Latch
- Angled corner for Side & Rear Light visibility

EXPLODED VIEW

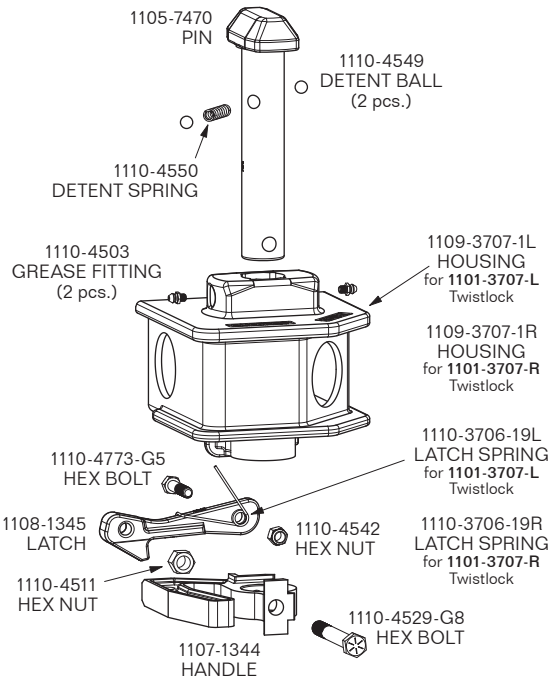

MODEL 1110-8400

LIGHT HOLE PLUG
Weld-on

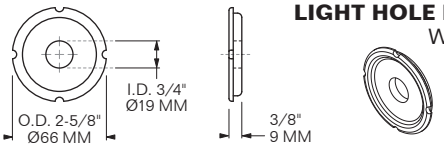

CONVERTS Ø2-5/16" LIGHT HOLE TO Ø3/4"
MATERIAL: CAST STEEL **FINISH:** WELDABLE PRIMER
WEIGHT: 0.3 LBS / 0.136 Kg

MODEL 1110-8674

LIGHT HOLE PLUG
Bolt-on

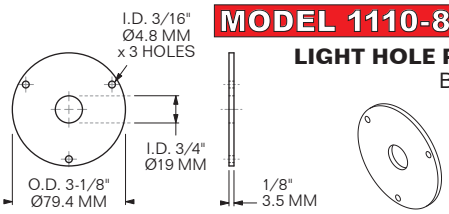

CONVERTS Ø2-5/16" LIGHT HOLE TO Ø3/4"
MATERIAL: STEEL **FINISH:** WELDABLE PRIMER
WEIGHT: 0.28 LBS / 0.127 Kg

BUFFERS USA INC ®
"The Intermodal Hardware Specialists"

904-696-0010
E-mail: sales@buffersusa.com